Multiplex
Model: 90950061B

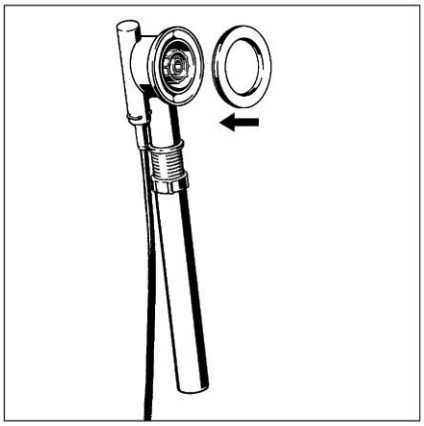

1

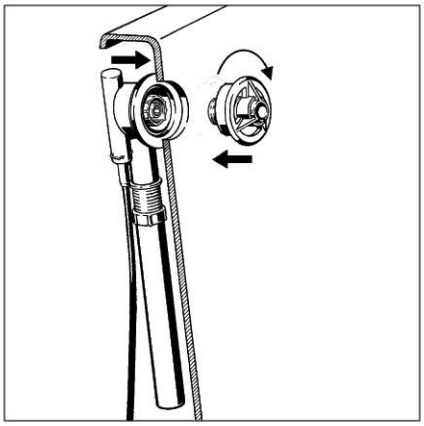

2

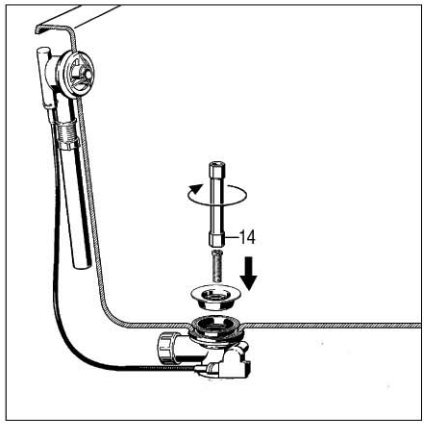

3

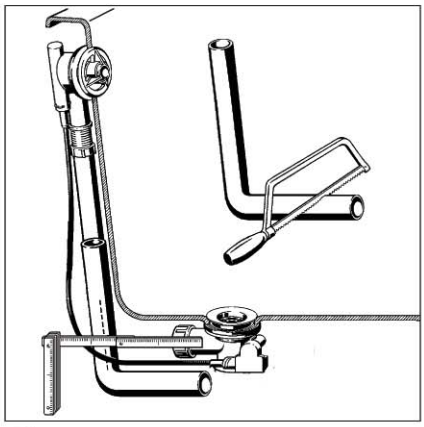

4

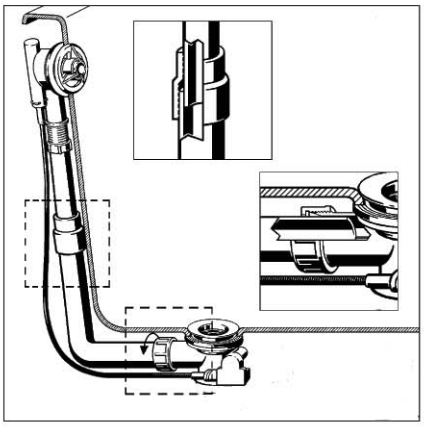

5

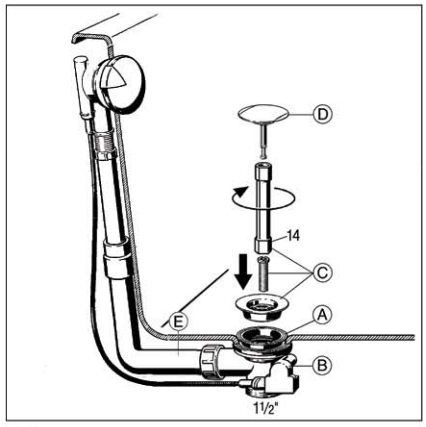

6

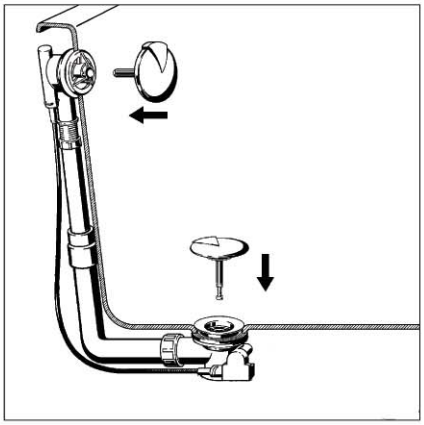

7

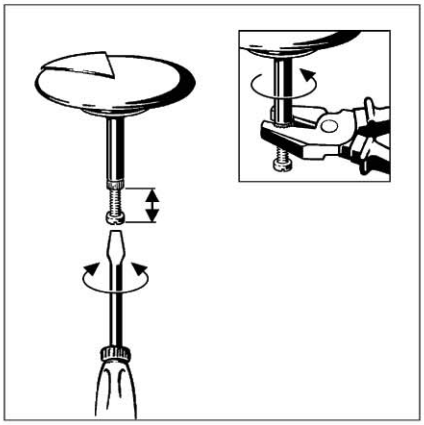

8

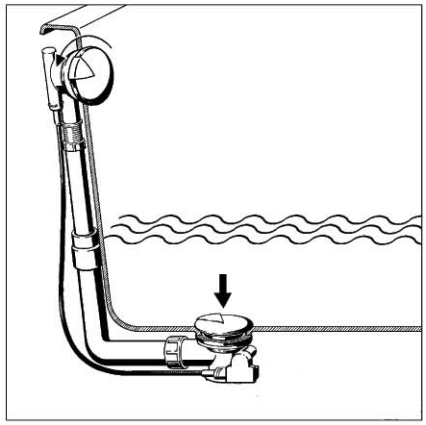

9

Argent

viega™