HANSA

HANSAECOJET OVERHEAD - 1 SPRAY

Product Image

Technical Specification

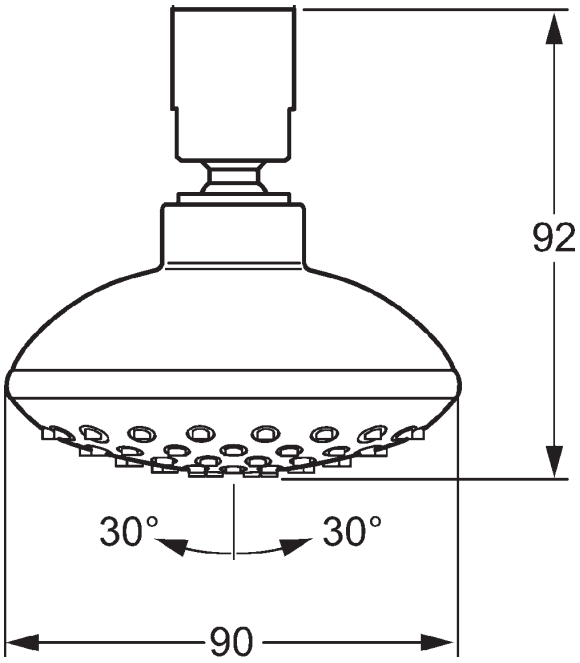

Description

HansaEcoJet Overhead - 1 Spray (Excluding Wall Arm)
WELS 3 Star / 9Lpm

446401000037

Additional Information

- German Engineered
- Cool Touch
- Limescale protection technology