CENTRA 1300 WALL HUNG CABINET WITH DRAWERS (SINGLE BOWL BASINS)

Product Image

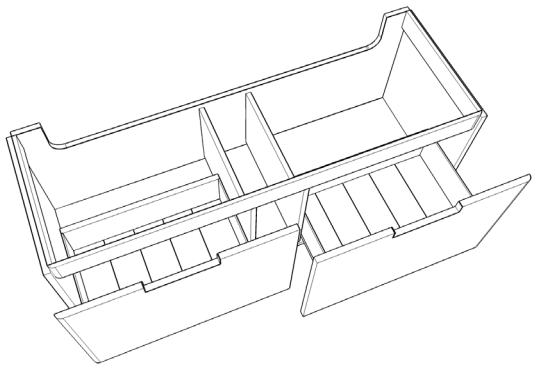

Technical Specification

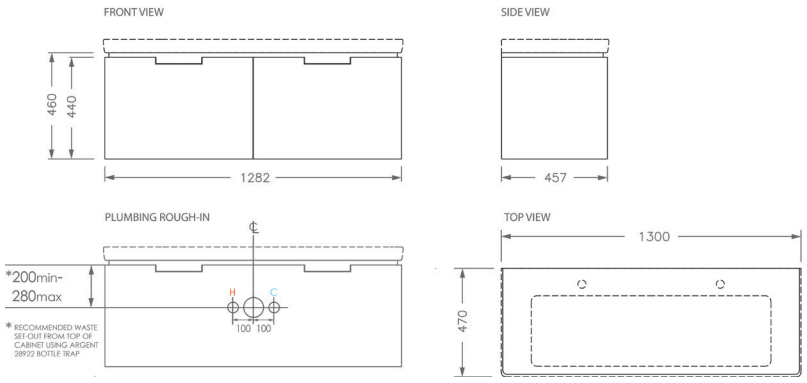

Description

Centra 1000 Wall Hung Cabinet With Drawer (Single Bowl Basins)

CD20SW1301

Additional Information

- 5 Year Warranty *Conditions Apply
- White
- W1282 x D457mm
- 2 Drawers
- Suits Villeroy & Boch 1300 single bowl basins Subway 7176D201CB & Architectura 61181301CB
- Basin priced separately