Villeroy & Boch
1748

LOOP ROUND UNDER-COUNTER BASINS

Product Image

Technical Specification

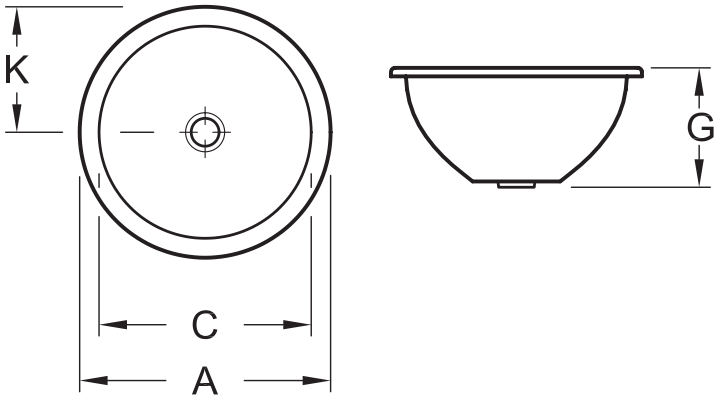

	A	C	G	K
6180 43	525	440	225	263
6180 38	450	380	205	225
6180 33	390	330	185	195
6180 28	340	280	165	170

Installation Notes: □ No cut-outs should be attempted in bench top without having the actual Basin/s that are going to be installed. □ Only Silicon based adhesives should be used, not epoxy resins. □ Overflow hole should be positioned closest to the front of the cabinet.

Description

Loop round Under-Counter Basins No Taphole

61804301	OD 525mm / ID 440mm
61803801	OD 450mm / ID 380mm
61803301	OD 390mm / ID 330mm
61802801	OD 340mm / ID 280mm

Additional Information

- 5 Year Warranty *Conditions Apply
- Recommended Waste 94240

Villeroy & Boch 1748 BETTE REGINOX Argent