Argent

VISTA COMFORT HEIGHT BTW TOILET SUITE

Product Image

Technical Specification

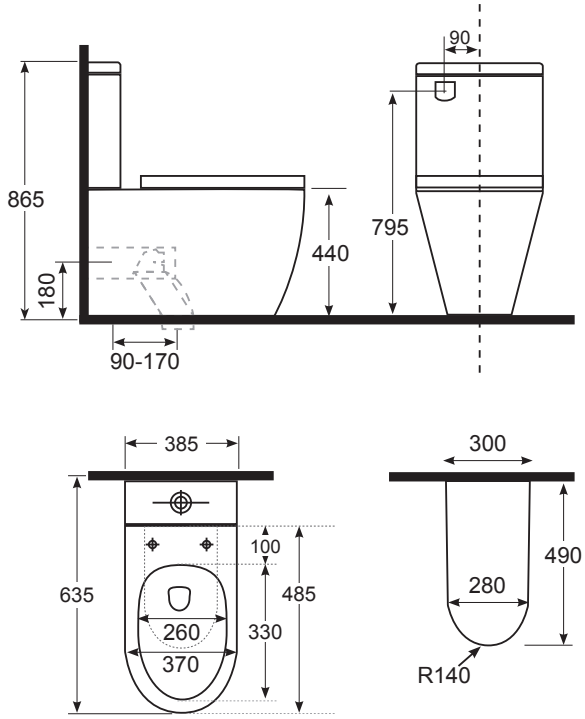

S-Trap Set-Out Adjustment Range 90-170mm

Description

Vista Comfort Height Back-To-Wall Toilet Suite
S&P Trap with Soft Close Seat
S-Trap set out 90-170mm
WELS 4 STAR/ 4.5/3L

80990SBDB Bottom Water Entry
80990SRDB Rear Water Entry

Additional Information

- 5 Year Warranty*
- Ambulant Compliant

WATER RATING www.waterrating.gov.au 3.5 litres average flush Licence No. 0008

AS 1428.1 Ambulant Compliant

SOFT CLOSE

*Conditions Apply

Villeroy & Boch 1748 BETTE REGINOX Argent