Architectura Overhead Shower

TECHNICAL SPECIFICATIONS

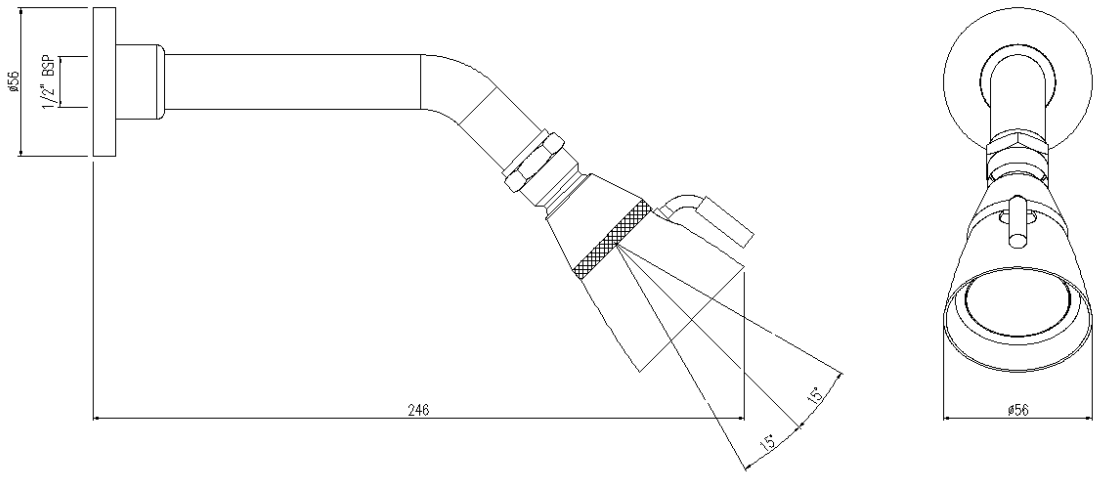

PRODUCT NO: **90021**, Architectura Overhead Shower & Arm – *246mm Reach* - (3 Star / 9Lpm)