Villeroy & Boch
1748

Aveo Wall Hung Pan

SOFT CLOSE

ceramicplus Villeroy & Boch

Suitable for a 3 Star flushing System

TECHNICAL SPECIFICATIONS

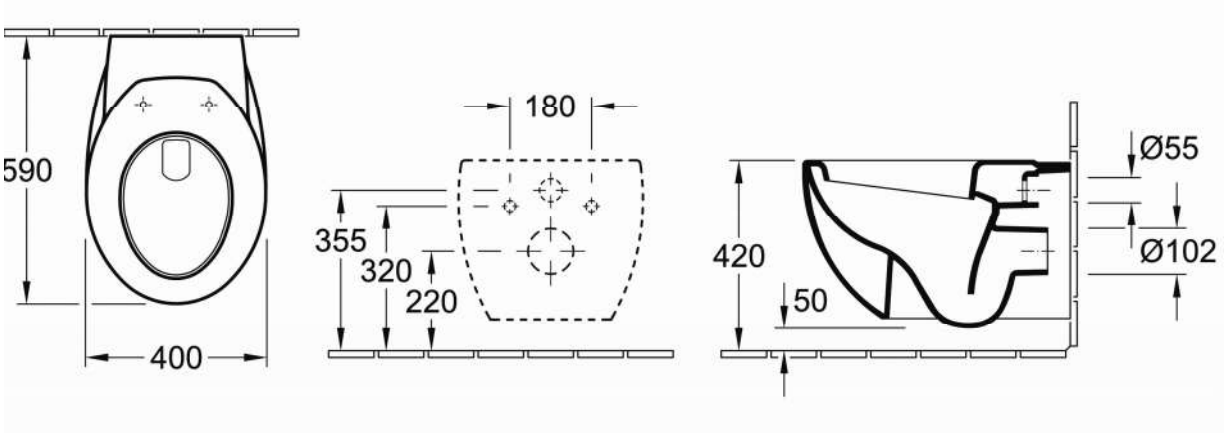

For use with concealed cistern

(Ask about Grohe In-Wall flushing systems & Frames or mounting frame code 9954)

PRODUCT NO: **661210R1SCCB**, Aveo Wall Hung Pan with SOFT CLOSE & ceramicplus Villeroy & Boch