HANSAVIVA TRIO 130/600 RAIL SET 3 SPRAY

Product Image

Technical Specification

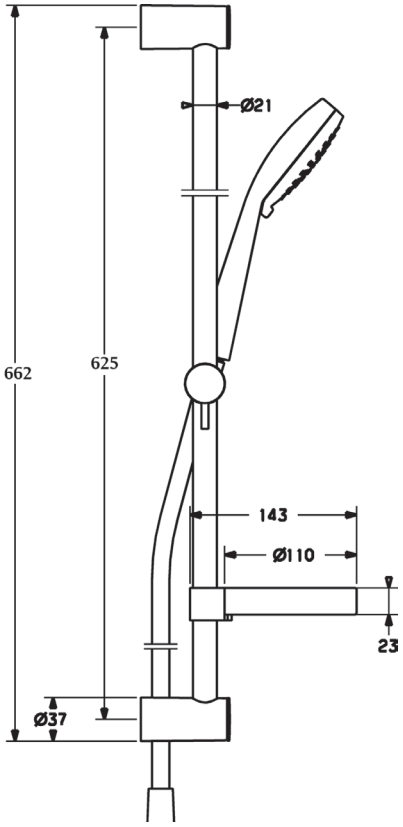

Description

HansaViva Trio 130/600 Rail Set
3 Spray with Wall Union
WELS 3 Star / 9Lpm

442001300037

Additional Information

- 15 year Warranty* Conditions Apply
- German Engineered
- Cool Touch
- Limescale protection technology
- Includes soap dish
- Shower hose 1750mm length

15 YEAR WARRANTY *Terms & Conditions Apply

WATER RATING www.waterrating.gov.au 9 litres per minute In accordance with AS/NZS 6400 Licence No. 0063