Argent

ZEN UNDER-COUNTER BASIN - DEEP

Product Image

Technical Specification

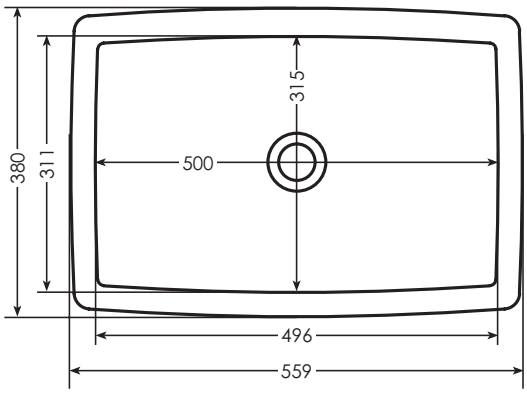

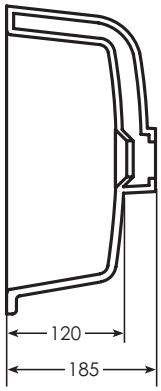

Description

Zen Under-Counter Basin - Deep

FC07TAL00 No Tap hole

Additional Information

- OD 560 x 380mm
- ID 500 x 315mm
- Depth 120mm
- Recommended Waste 94240

Villeroy & Boch 1748 BETTE REGINOX Argent