Villeroy & Boch 1748

Luxx Wall Mounted Basin/Bath Trim

Gun Metal

Product Image



Product Details

Code:	**6834590B**
Brand:	Villeroy & Boch
Range:	Luxx
Warranty:	15 Years*
WELS:	*5 Star 5.5 LPM, Reg #: T44765*

Additional Features

Required Product
ColourChoice 8733500

Recommended Products

Additional Notes
- Lead Free
- 115mm Centres
- 35mm Ceramic Cartridge
- Spout Can Be Positioned On The Left Hand Side Of The Mixer Only
- Use as a Bath Mixer By Changing To The Full Flow Aerator Provided In The Box

Installation Instructions
* ONLY USE COLOURCHOICE BODY 8733500

Technical Specification

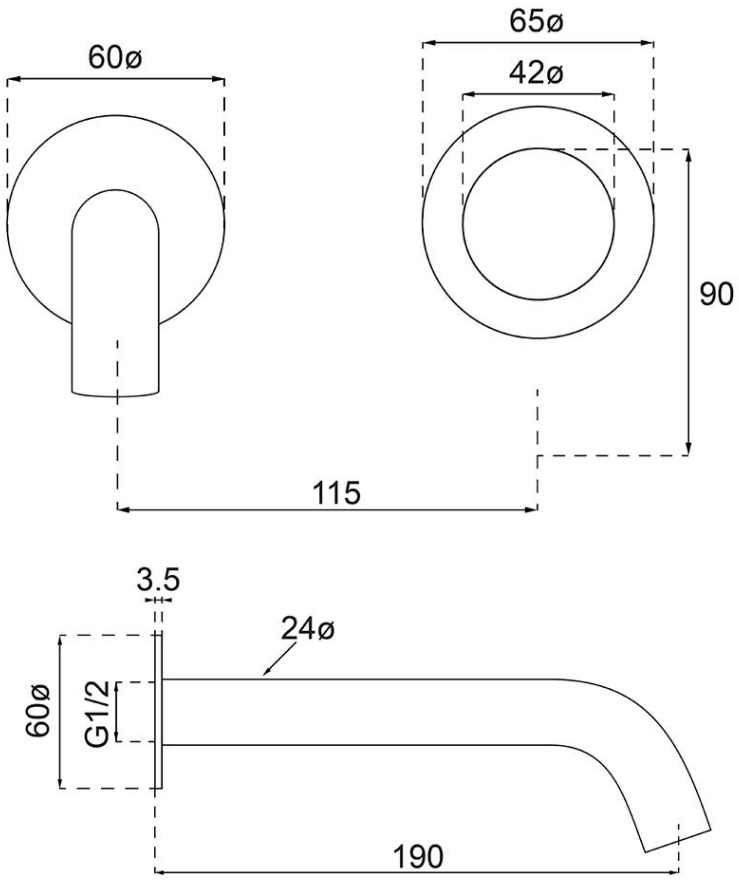

*Please visit **argentaust.com.au/warranty** to view the full warranty

Note: All dimensions are in millimetres and are subject to normal manufacturing variations. Always use the physical product measurements for cut-outs and rough-ins as the technical details shown may differ from the actual product. Use acetic cured silicone sealant. Do not use epoxy type adhesives. Clean with damp cloth. Do not use abrasive cleaners, liquids or pastes.